SAVIO FIRMINO®

ART.: 3078P_quote	
MAX OVERALL DIMENSIONS (cm): 115 x 175 x 133h	SCALE: 1:20

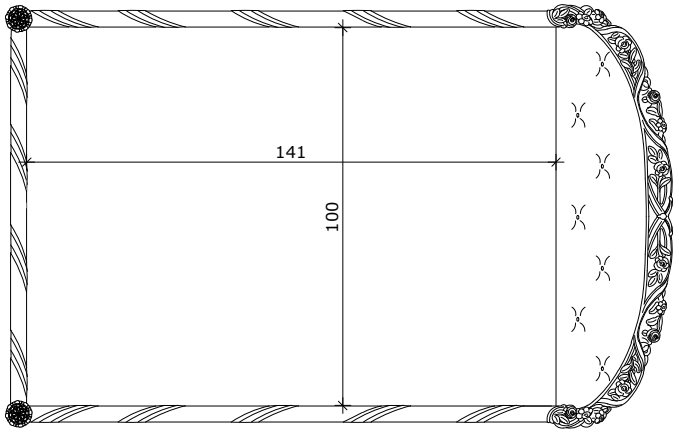

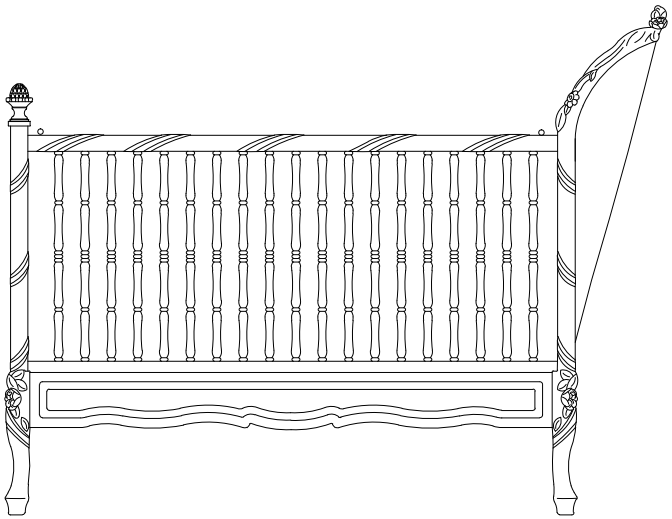

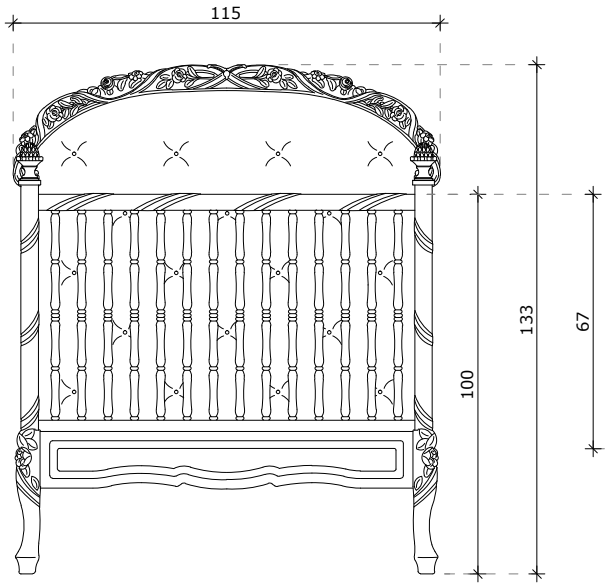

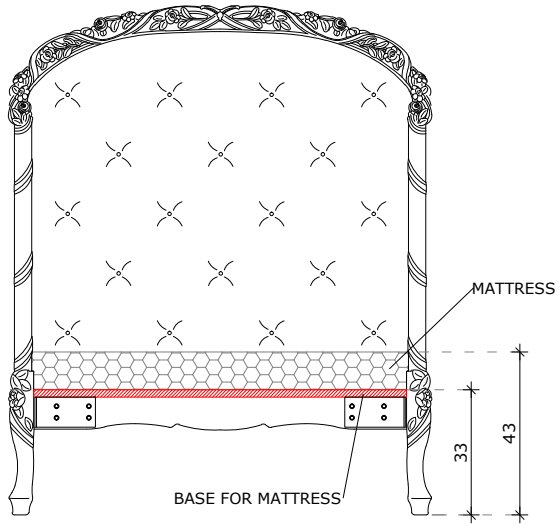

This drawing is the property of Savio Firmino di Savio Guido E C. s.n.c.. It can not be reproduced or transmitted to third parties without the explicit authorization of the same. Each piece is the result of the experienced hands of our carvers this makes our products unique and different from each other. Please note that, depending on the material and the craftsmanship, the dimension may vary slightly.